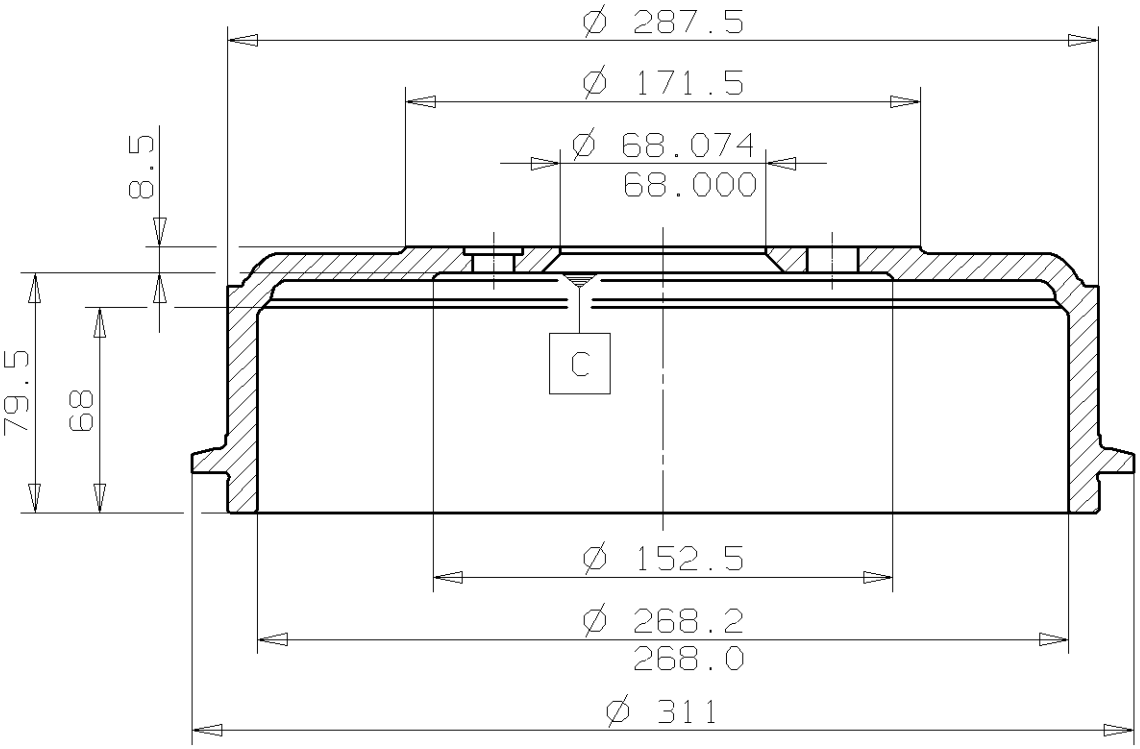

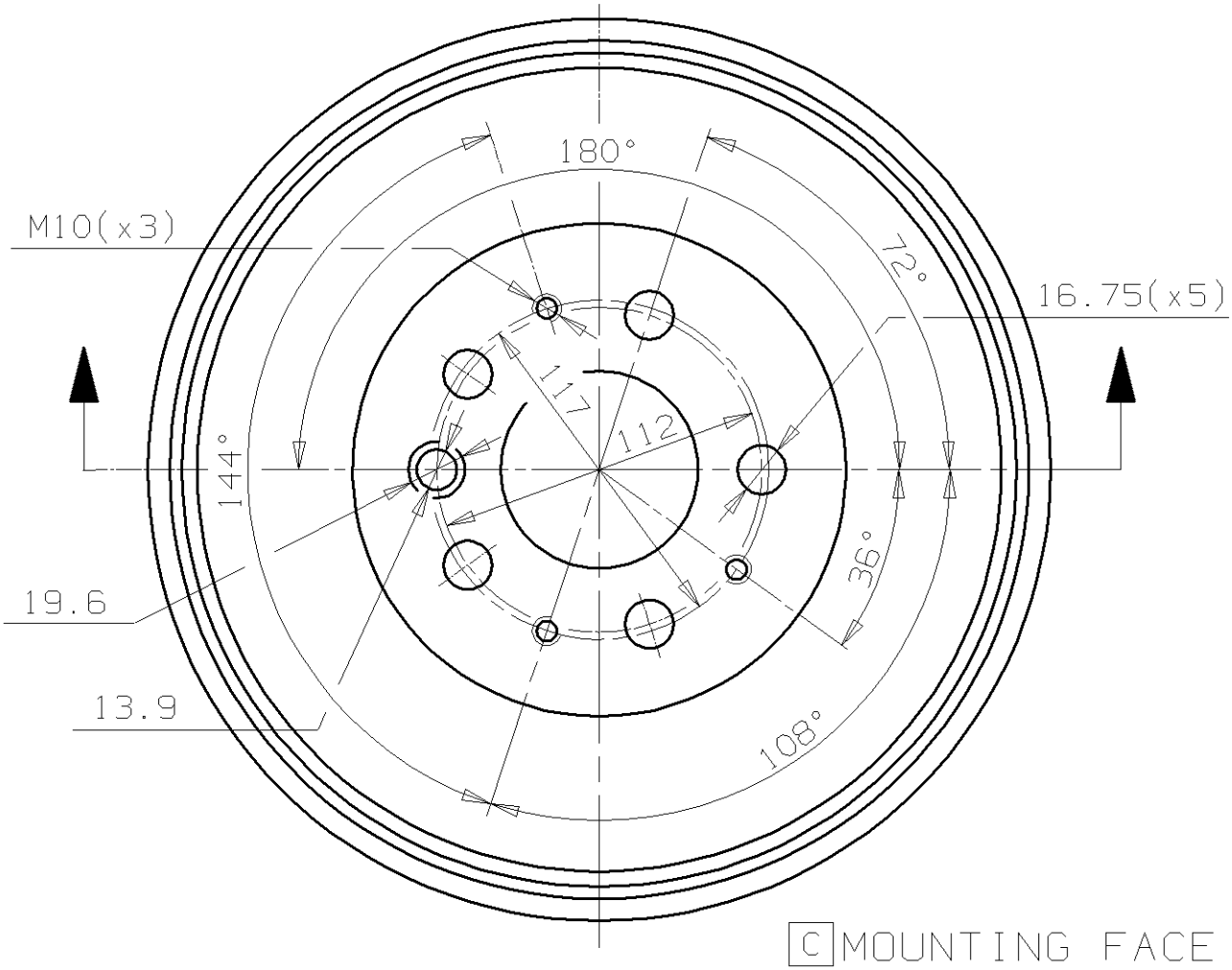

C MOUNTING FACE

Max.DIA. 269.5 mm

Weight 8.5 Kg